AIR FILTER REGULATORS
P10

DESCRIPTION

The ADCATrol P10 air filter regulators are used to remove both solid and liquid impurities from the air and to regulate the output pressure to the required value for general purpose pneumatic systems.
The filter bowl is transparent, allowing easy monitoring of the condensate level.

MAIN FEATURES

Self relieving.
Compact regulator with integrated filter.
5 micron large surface area element.
Manual and automatic condensate exhaustion are easier when there is no pressure.
Pressure gauge diameter 42 mm x 1/8".
Mounting bracket.

USE: Pneumatic systems.

AVAILABLE MODELS: P10 – aluminum and polycarbonate.

SIZES: 1/4".

CONNECTIONS: Female threaded ISO 7 Rp.

INSTALLATION: Horizontal installation.
See IMI – Installation and maintenance instructions.

CE MARKING – GROUP 2 (PED – EUROPEAN DIRECTIVE)	
PS 12 bar	**CATEGORY**
1/4"	SEP

LIMITING CONDITIONS	
MODEL	**P10**
Maximum upstream pressure	12 bar
Maximum downstream pressure	10 bar
Minimum downstream pressure	0,5 bar
Maximum design temperature	60 ºC
Minimum operating temperature	-10 ºC

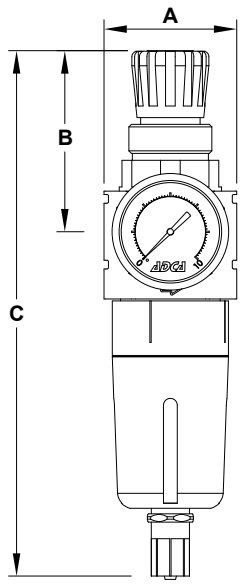

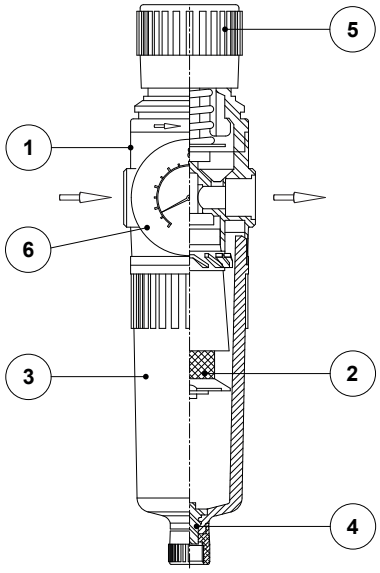

DIMENSIONS (mm)				
SIZE	**A**	**B**	**C**	**WEIGHT (kg)**
1/4"	45	82	177	0,4

CAPACITY CHART

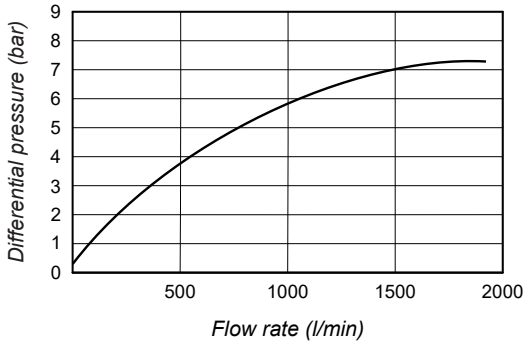

MATERIALS	
POS. No.	**DESIGNATION**
1	Body
2	* Filtering element
3	Transparent cover with guard
4	Exhaust valve
5	Adjustment knob
6	Pressure gauge

* Available spare parts.

We reserve the right to change the design and material of this product without notice.