TEMPERATURE SENSORS
TRPT1

DESCRIPTION

The ADCATrol TRPT1 is a series of Pt100 resistance temperature sensors specially designed for general industrial use. The sensing element is an RTD three wire device according to EN 60751 Class A. The sensor consists of a probe, a connection head and a measurement insert. The probe is made of austenitic stainless steel and the connection head is made of aluminum. The supply lines to the measurement insert are insulated from each other and from the probe tube with a ceramic insulator.
The sensor can be connected directly to a temperature indicator or controller that has a three wire Pt100 input.

MAIN FEATURES

Head type B-KNE.
Three wire sensing element.
Fast response time.
Easy to install.

OPTIONS:	Transmitter assembly with 4 to 20 mA output. Sanitary version with clamped connection. Design for air temperature measurements. Special insertion lengths. ATEX approval. Higher operating limits.
USE:	Temperature measurement in pipelines and vessels.
AVAILABLE MODELS:	TRPT1 – Pt100 sensor. TRPT1T – Pt100 sensor with analog transmitter.
SIZES:	1/2".
CONNECTIONS:	Male threaded ISO 228.
INSTALLATION:	In any position. See IMI – Installation and maintenance instructions.

LIMITING CONDITIONS	
Operating temperature (Class A)	-10 to 300 ºC
Maximum operating conditions	36,5 bar @ 400 ºC
Ambient temperature	-20 to 80 ºC

We reserve the right to change the design and material of this product without notice.

TECHNICAL DATA		
MODEL	**TRPT1**	**TRPT1T**
Enclosure/head	KNE	KNE
IP rating	IP 66	IP 66
Cable entry	M20 x 1,5	M20 x 1,5
Temperature range	-10 to 300 ºC (others on request)	0 to 200 ºC (others programmable*)
Output	3 wire Pt100 to EN 60751 – Class A	4 to 20 mA (loop powered)
Power supply	–	10 to 30 V DC
Maximum loop resistance	–	681 Ω at 24 V DC, 954 Ω at 30 V DC
Transmitter thermal drift deviation	–	Input 0,06 / 10 ºC Output 0,02% of span / 10 ºC

* Other temperature ranges can be programmed at the factory. In case other range is required, please inform when ordering.

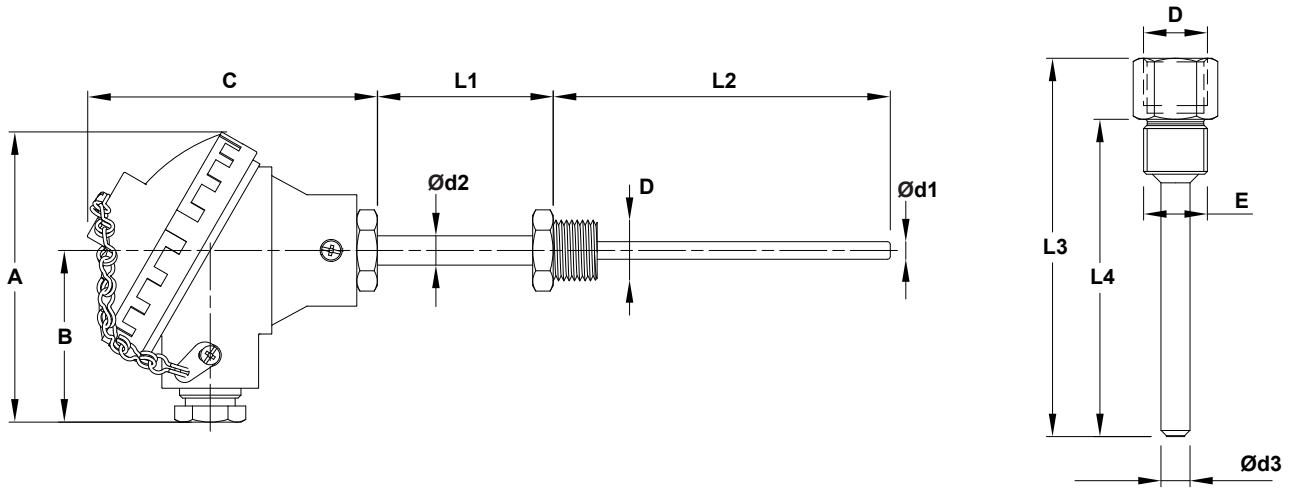

DIMENSIONS (mm)															
MODEL*	**SENSOR**									**THERMOWELL**					
	A	**B**	**C**	**D**	**Ød1**	**Ød2**	**L1**	**L2 ****	**WGT. (kg)**	**D**	**Ød3**	**E**	**L3****	**L4 ****	**WGT. (kg)**
TRPT1 – 100	99	59	99	1/2"	6	10	60	115	0,5	1/2"	10	1/2"	124	104	0,1
TRPT1 – 150	99	59	99	1/2"	6	10	60	165	0,5	1/2"	10	1/2"	174	154	0,1

* TRPT1 and TRPT1T models share the same dimensions as the additional transmitter is placed inside the KNE enclosure/head.
** Other insertion lengths on request.

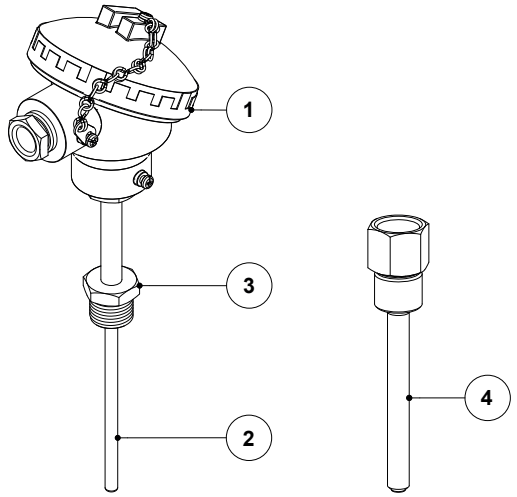

MATERIALS		
POS. No.	**DESIGNATION**	**MATERIAL**
1	Head	Aluminum alloy
2	Probe	AISI 316L / 1.4404
3	Process connection	AISI 316 / 1.4401
4	Thermowell (pocket)	AISI 316 / 1.4401

We reserve the right to change the design and material of this product without notice.